Project Design Document

1Design Intent

- *What experience are you trying to create?*
  Our Infernotron is a semi robot car, which can be controlled through your mobile phone via Bluetooth, and can detect objects and shoot.

- *Who is it for?*
  Students and learners exploring robotics and interaction design
  Users interested in remote monitoring and control systems

- *If solving a problem, what problem does it solve?*
  Bridging the gap between manual control and environmental awareness in basic robotic systems
  Our system introduces:
  object detection (IR sensor)
  real-time app feedback ("object detected")
  user-triggered response (shoot function)
  This creates a more aware and responsive system, demonstrating how even simple robots can move beyond passive control into interactive and decision-based behavior.

2. Inspiration & References

- We drew inspiration from **Transformers**, which are known for combining **dual functionality within a single form**. These toys seamlessly shift between two states (vehicle and robot), creating a dynamic and engaging user experience.
  This idea of **transformation and hidden functionality** formed the conceptual basis of our project *Infernotoron*, where we initially aimed to create a system that could transition between forms while maintaining usability.
  Link for the inspo - [Transformer Toys Studio Series Bumblebee|transformers Movie 5 Action Figure Set - Optimus Prime & Bumblebee Collectibles | Daraz.com.bd]

What did you learn from them?
Products that can shift between roles create curiosity and interaction.
Complex transformations often fail if not supported by strong mechanisms, this influenced our design decisions when simplifying our system.
The "reveal" or change in form creates excitement, which we aimed to translate into our interaction design.

3. User Journey

The user notices the device in an idle state, lights off, no movement. Curious, they approach and try to understand how it works. There's a moment of hesitation, figuring out where to begin.

The user places an object or moves within its sensing range. As soon as the bot detects movement, it comes alive, slowly starting to move, scanning its surroundings. The user experiments - moving left, right, closer

After a few interactions, the user starts understanding its behavior, almost like a game. They try to predict and manipulate its movement, turning the interaction into a playful challenge.

4. Success Criteria

- The rover should **move forward, backward, and turn** smoothly via app control
- Response delay should be **less than 1 second**
- IR sensor should **detect objects within a defined range**
- App must display **"Object Detected"** immediately upon detection
- LED and buzzer should provide **instant physical feedback**

5. System Overview

The project is a **mobile, app-controlled robotic rover** integrated with sensing and feedback mechanisms.
It operates as a **semi-autonomous system**, where:

- The user controls movement through a mobile application
- The system independently detects objects using sensors
- Feedback is provided both on the app and through physical outputs
- The user can trigger a response action based on detected input

- Main parts :
  Microcontroller (ESP32) - Acts as the **brain of the system**
  Motor Driver - Controls the **movement of DC motors**
  BO DC Motors + Wheels - Provide **mobility to the rover**
  IR Sensor - Detects nearby objects

- LED + Buzzer - LED → visual feedback, Buzzer → audio feedback

6. High-Level Block Diagram

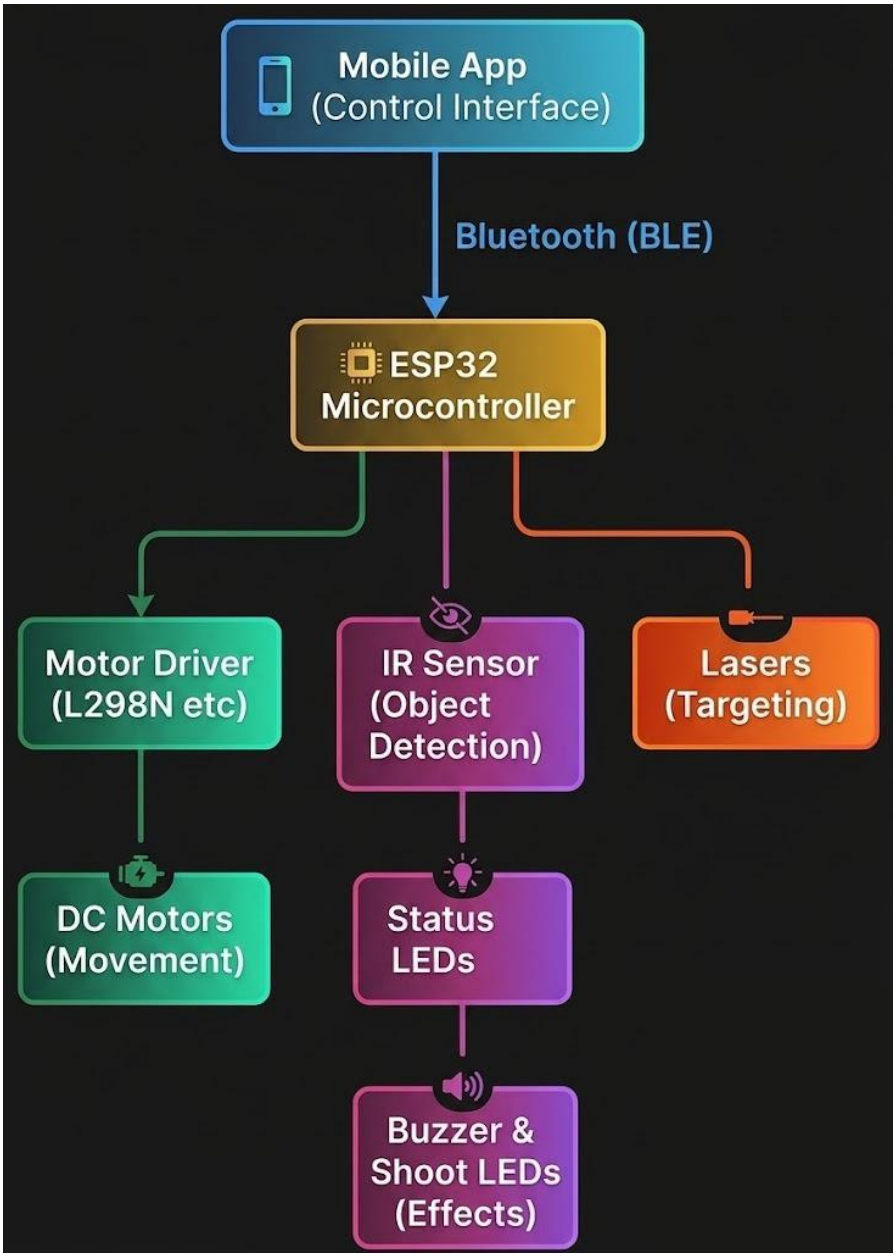

7. Input / Output Mapping

Input	Process	Output
User commands from mobile app	Microcontroller receives signals via Bluetooth/WiFi module	Bot moves in commanded direction

(forward, left, right, stop, shoot)		
“Shoot” command from mobile	System validates command and triggers laser module	Laser emits in the aimed direction
Continuous control input (buttons)	Real-time signal processing and updating motor control	Smooth movement and direction changes
No input / idle state	System maintains last state or stops (based on logic)	Bot remains stationary
Obstacle detected	Overrides user command for safety	Bot stops / changes direction automatically

8. Sketches & Concepts

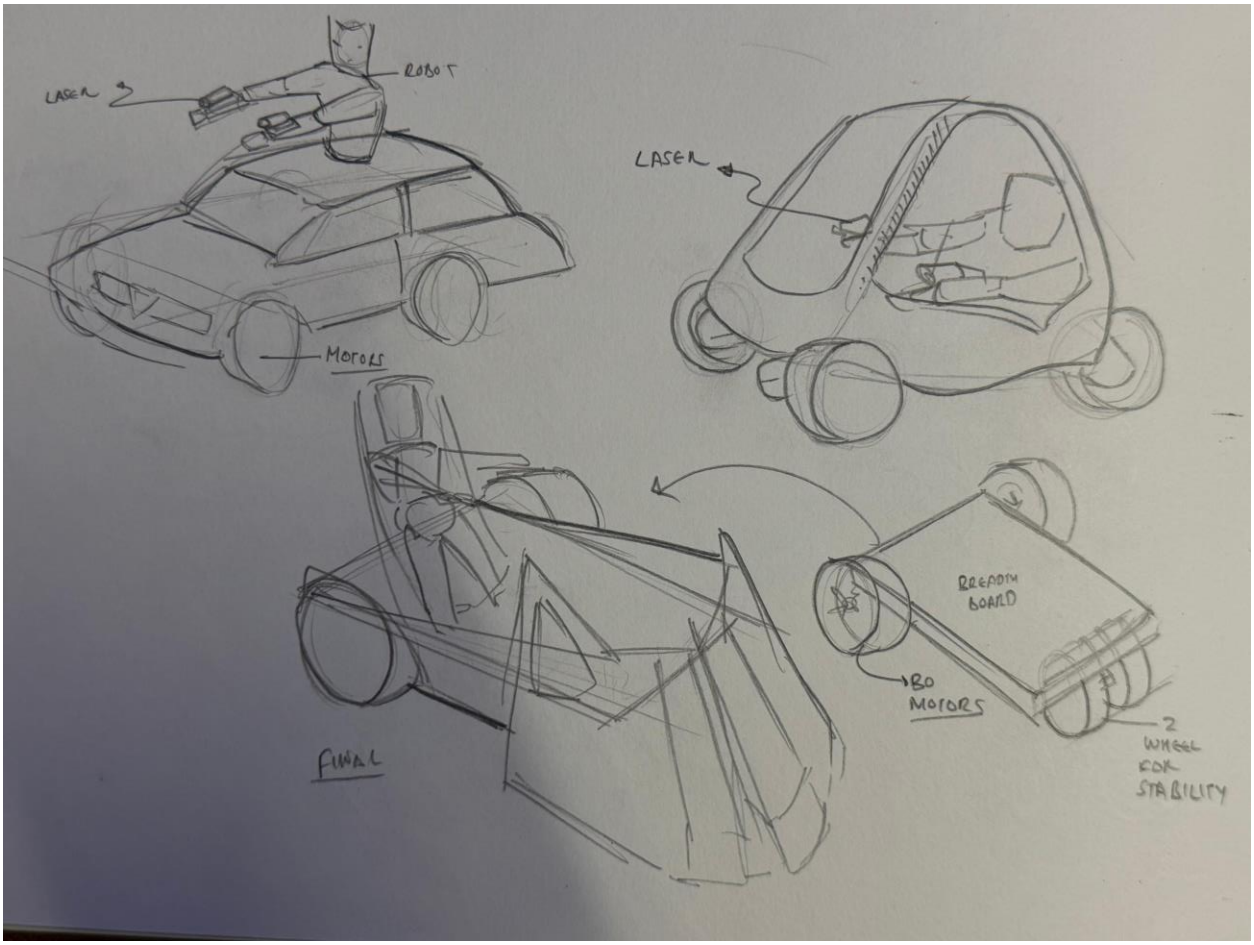
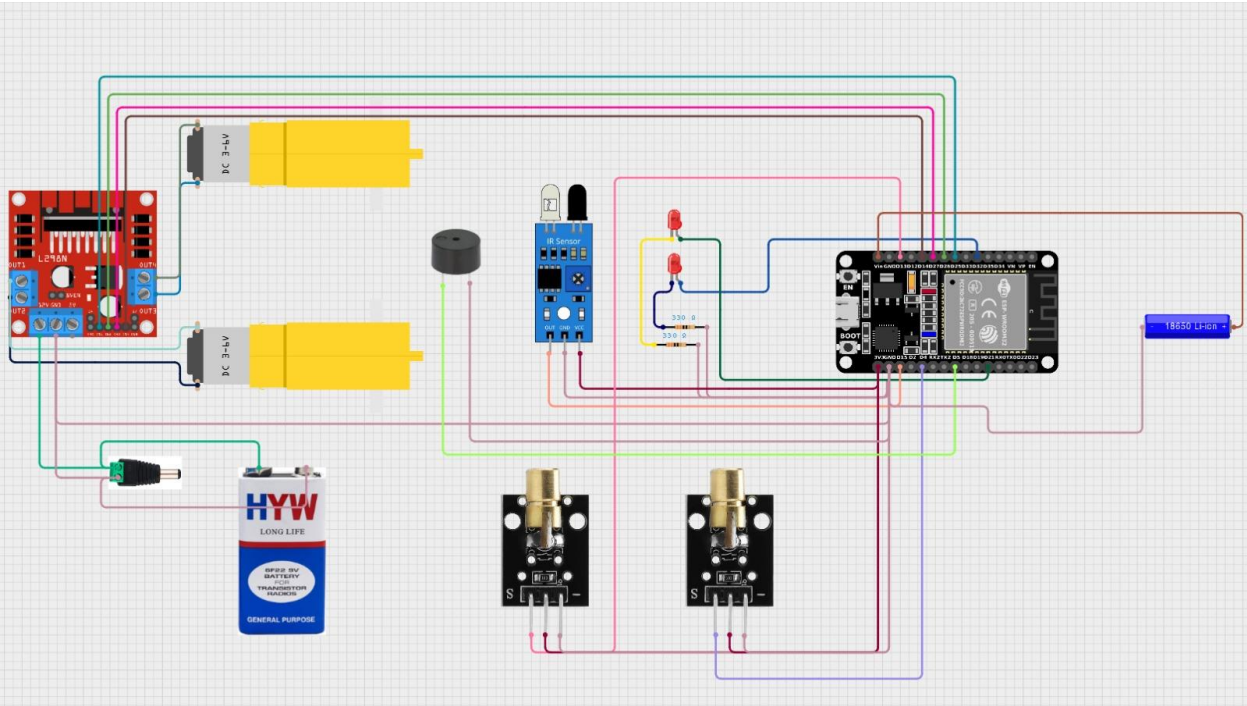
9. Final System Architecture (Labelled)